be quiet!®

# DARK BASE 900

OUTSTANDING FLEXIBILITY AND SILENCE

## IDEAL APPLICATIONS

High-end workstations and desktop PCs
High-resolution gaming and multimedia systems
Extremely overclocked systems
Super silent water-cooled PCs

## HIGHLIGHTS

Fully versatile thanks to modular construction
Three be quiet! Silent Wings 3 PWM fans
Ready for water cooling radiators up to 420mm
Intelligent full circuit airflow system
Wide range of features and high-quality materials

**Outstanding Flexibility and Silence**

The be quiet! Dark Base 900 PC case is the perfect choice for all of those who expect the highest standards when it comes to modularity, compatibility and design.

Highlights »

- Fully versatile thanks to modular construction, offering an relocatable motherboard tray, repositionable HDD slots, support for even E-ATX and XL-ATX as well as the possibility of an inverse layout
- Three pre-installed Silent Wings 3 140mm PWM fans featuring a smooth-running 6-pole motor, fluid-dynamic bearing and funnel-shaped air inlets
- Manual stepless fan controller supports up to three PWM and three 3-pin fans
- Effective full circuit airflow system with innovative noise-reducing vents all around the case
- Completely sound insulated case with decoupled elements for motherboard tray, power supply and drives
- Four areas for water cooling radiators up to 420mm on top, front, back and base of the case
- 2-in-1 side panel vent can be closed for silent operation or opened for two additional fans
- 3-year manufacturer's warranty
- Product conception, design and quality control in Germany

Dark Base 900 »

be quiet! Dark Base 900 offers unrivaled flexibility with impeccable cooling and silence features. Simply an engineering work of art!

+ NOISE INSULATION
+ AIRFLOW CONTROL
+ SILENT WINGS

Version: 02/2019

We do not take responsibility for typographical errors. Similar image.

be quiet!

# DARK BASE 900

OUTSTANDING FLEXIBILITY AND SILENCE

## Features »

**MB-tray:** The motherboard tray can be repositioned vertically, to suit individual space requirements, or installed alongside the left panel with redefined airflow. It is removable for use as a bench table.

**Silent Wings 3:** The three pre-installed virtually inaudible Silent Wings 3 PWM fans with unique fan blade design, rubberized fan frame and funnel-shaped air inlets provide excellent air circulation.

**Side panel:** Adjustable side panel cover that you can close for absolute silence, partly open for more air intake, or completely open with the possibility to mount up to two optional fans.

**Front I/O port:** Manual stepless fan controller supports up to three PWM and three 3-pin fans. 2x USB 3.0, 2x USB 2.0, HD audio jacks.

**HDD slots:** Flexible installation options thanks to repositionable single HDD slots. Support for up to 7 HDDs, 15 SSDs and 2 optical drives.

**Full circuit airflow system:** Innovative noise-reducing vents all around the case result in an effective full circuit airflow.

## Airflow »

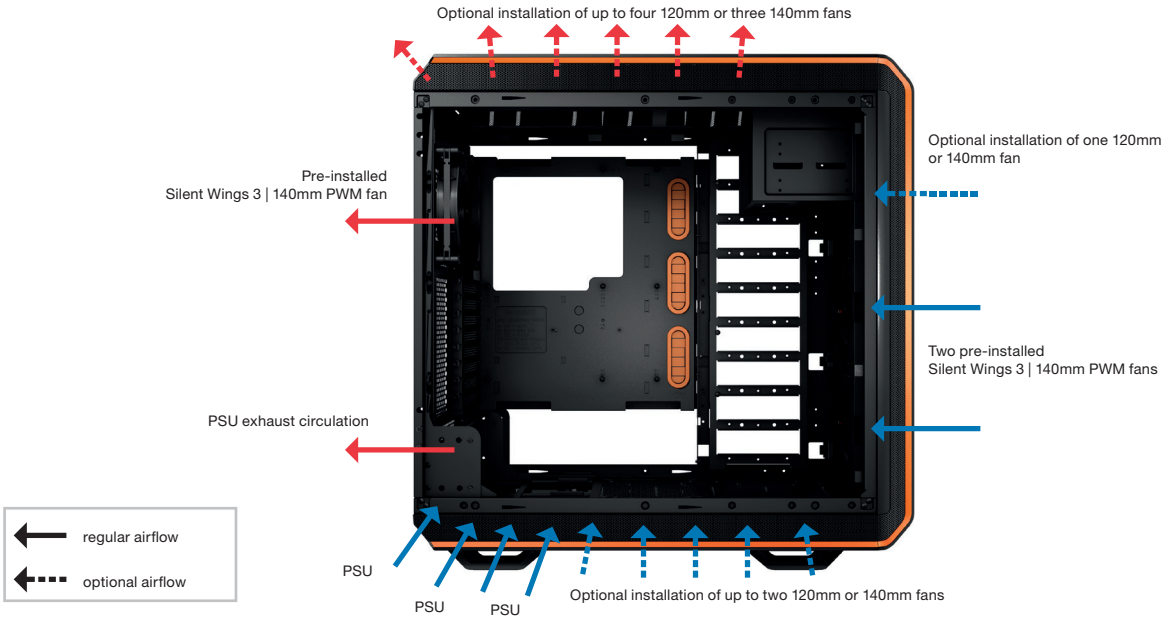


Version: 02/2019

We do not take responsibility for typographical errors. Similar image.

be quiet!

# DARK BASE 900

OUTSTANDING FLEXIBILITY AND SILENCE

## Dimensions (mm) »

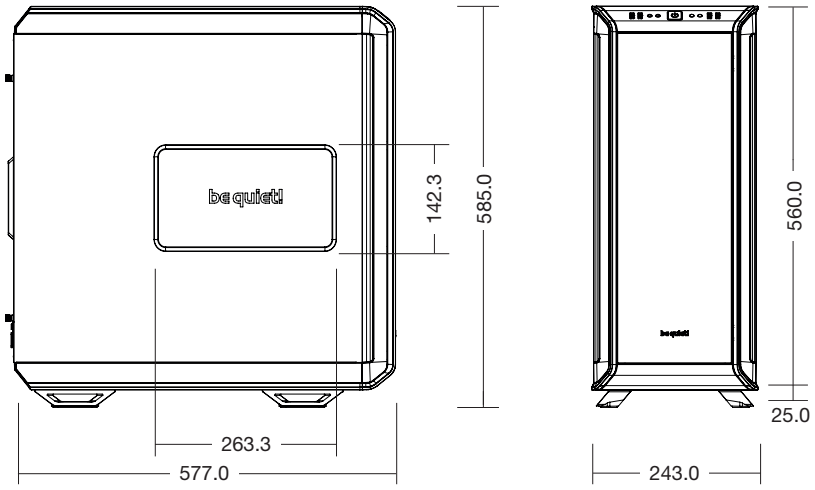


| General Data Case » | |
|---|---|
| Motherboard compatibility | E-ATX, XL-ATX, ATX, M-ATX, MINI-ITX |
| Form factor PSU | ATX |
| Case size (L x W x H in mm) | 577 x 243 x 585 |
| Material | 0.8 - 1mm steel, ABS plastic, 0.8mm aluminium |
| Weight incl. package / without package (kg) | 16.3 / 14.2 |
| I/O Panel | 2x USB 3.0, 2x USB 2.0, HD Audio (mic + headphone jacks) |
| Expansion slots (pcs.) | 8 |
| **Drive Bay Capacity »** | |
| 5.25 | 2 (removable) |
| 3.5 | 7 (individually removable) |
| 2.5 | 1 on motherboard tray<br>14 inside the HDD slots (removable) |
| **Cooling System »** | |
| Pre-installed Silent Wings 3 PWM fans (mm/rpm) | Front: 2x 140 / 1,000<br>Rear: 1x 140 / 1,000 |
| Optional fans (mm) | Top: 3x 140 / 4x 120<br>Front: 1x 140, 120 (w/o ODD cage)<br>Bottom: 2x 140, 120<br>Side panel: 2x 120 |
| Optional liquid cooling system (radiotor in mm) | Top: 120, 140, 180*, 240, 280, 360, 420<br>Front: 120, 140, 240, 280, 360, 420<br>Rear: 120, 140<br>Bottom: 120, 140, 280 |
| Cooling solutions | Air channels (top, front, side)<br>Manual stepless fan controller (3x PWM, 3x 3-pin)<br>2-in-1 air intake side panel |
| **Maximum Dimensions (mm) »** | |
| CPU cooler | 185 |
| PSU (without bottom fan) | 150 - 184 |
| Graphics card (standard) | 325 |
| Graphics card (w/o HDD slots) | 470 |
| **Insulation and Damping »** | |
| Sound insulation mats (top, front, side) | ✓ |
| Anti-vibration decoupled HDD / PSU / MB-tray | ✓ |

*Mounting point of 180mm radiator is c/c 154mm

## Color Options »

| Dark Base 900 | Art. no | EAN code |
|---|---|---|
| Orange | BG010 | 4260052184912 |
| Black | BG011 | 4260052184929 |
| Silver | BG012 | 4260052184936 |

## Certifications »

CE RoHS 2011/65/EU

## Contact »

Service Hotline: +49 40 7367 686 44
(Mondays to Fridays from 9:00am to 5:30pm CET)

Mail: service@bequiet.com

+ SILENT WINGS

**Virtually inaudible cooling for your system »**

The fan quality is one of the main factors contributing to the noise level of your PC. As the German specialist for outstandingly quiet computer components we have more than 10 years of experience in the field of noise reduction. That knowledge allows us to produce the quietest fans on the market.

Look for the +Silent Wings Logo. It indicates our products which include our state-of-the-art fan technology and enables the perfect balance between superior cooling and serenity.

Version: 02/2019

We do not take responsibility for typographical errors. Similar image.